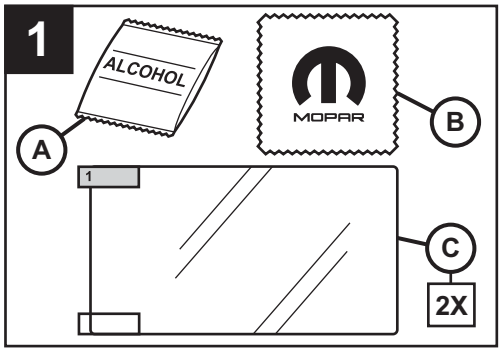
1
ALCOHOL
MOPAR
A
B
C
2X

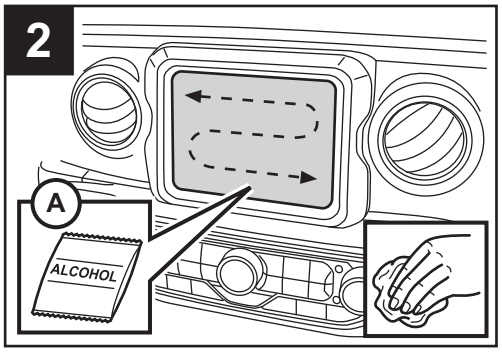
2
A
ALCOHOL

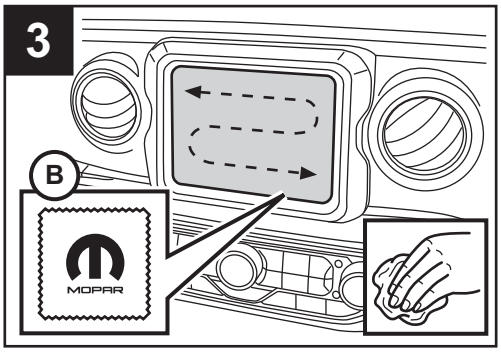
3
B
MOPAR

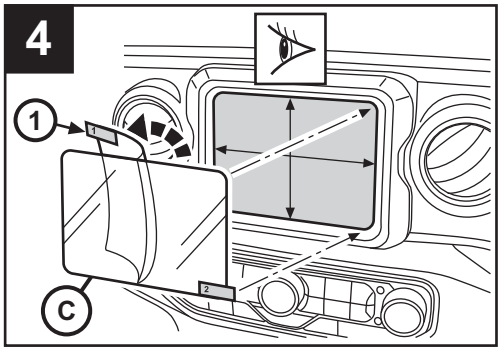
4
1
C

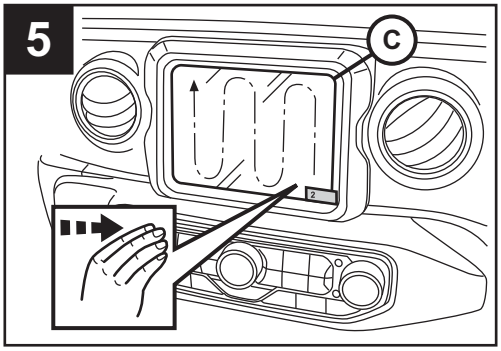
5
C

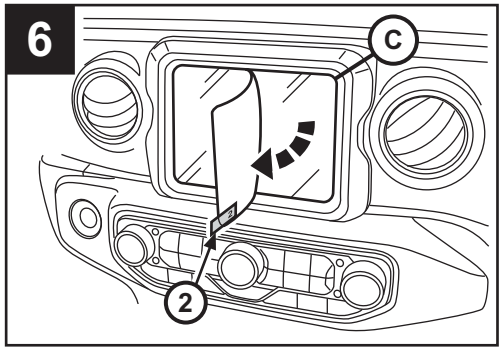
6
C
2